Shree Shanti Honda

HONDA

EXPLORE UNFILTERED

HONDA

NX 200

HONDA

NX 200

Embark on thrilling journeys and discover a world of limitless possibilities with the Honda NX 200. Designed to ignite your passion for exploration, this dynamic motorcycle is engineered to conquer both urban streets and rugged terrains with ease. Whether you're navigating through city traffic or embarking on a thrilling off-road journey, the NX 200 delivers an unmatched riding experience that redefines versatility and performance.

What's New

- TFT Meter
- Honda RoadSync
- USB C Port
- Bluetooth
- Navigation
- 2CH ABS
- HSTC
  (Honda Selectable Torque Control)
- OBD2B

Superior Tech

Whatever is your destination, if you are headed there on your NX200, you will be enveloped in the ultimate comfort. Thanks to its advanced technological features that ensure your rides are convenient, safe and full of thrill!

TFT Display

The TFT display captures everything one needs to know during the ride. With two display themes, Honda Road Sync, HSTC Indicator and more, every ride will be tailored to the rider's preferences always.

Honda RoadSync

An app that connects a rider's smartphone to their Honda bike using Bluetooth.

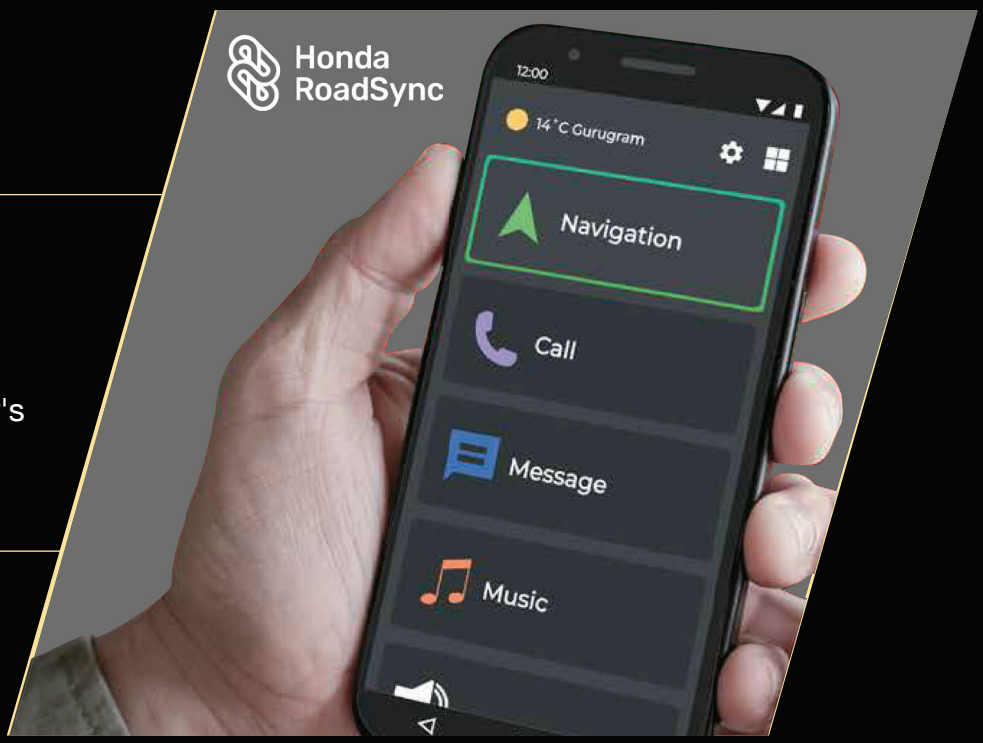

Manage messages via voice commands

Get real-time weather updates for any location

Make or manage calls right from your NX200

Reach anywhere via turn-by-turn navigation

Control music on your fingertips

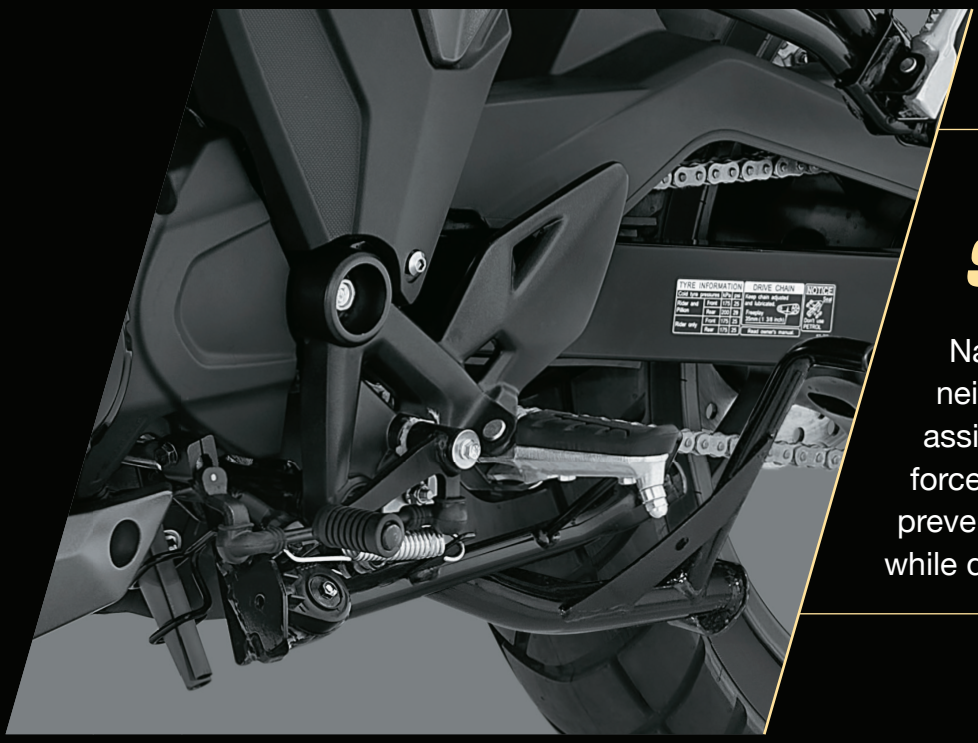

Assist Slipper Clutch

Navigate the urban neighbourhood with ease as the assist slipper clutch requires less force enabling quick shift and prevents rear wheel hopping while down shifting.

Dual Channel ABS

The NX200 is equipped with dual channel ABS which ensures superior braking capability even on wet, slippery roads. It also has an ABS indicator on the TFT meter that displays whether the ABS is on or off.

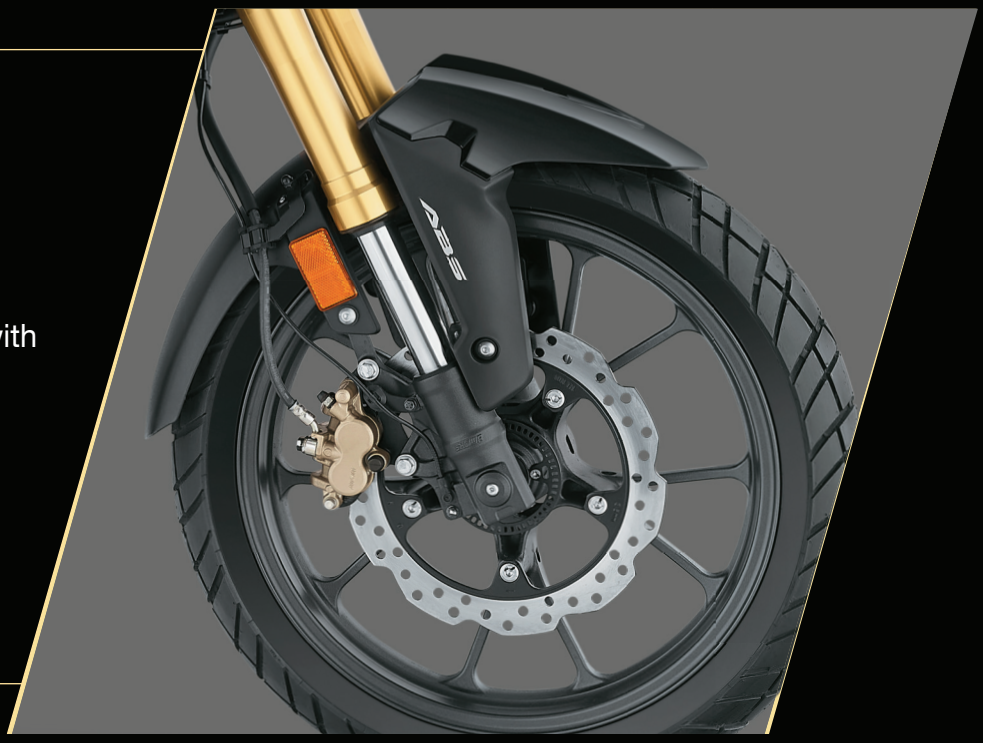

LED Winkers

The winkers are ergonomically incorporated on the knuckle covers to ensure safety and functionality without compromising on your style quotient.

Golden USD Front Fork

Turn heads at every turn with the golden front forks of the NX200 – a perfect example of style meets function.

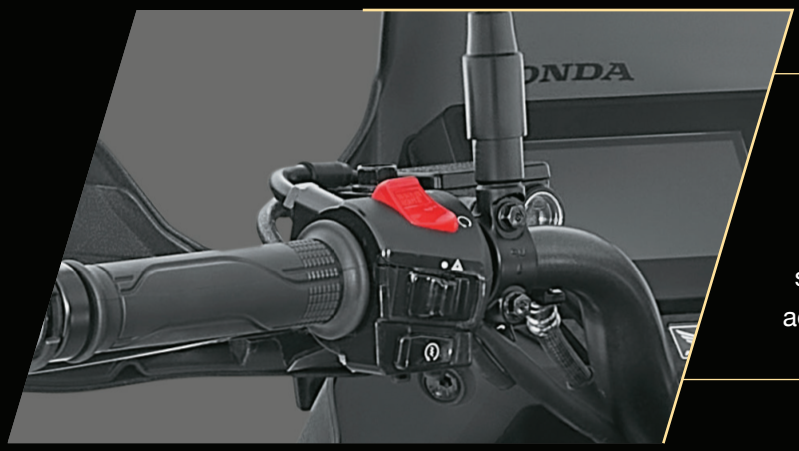

Engine Stop Switch

Turning the engine on and off no longer requires twisting of a key. Just a flick of a switch and you can set out on your adventure instantly.

Honda Selectable Torque Control

The NX200 comes equipped with HSTC (Honda Selectable Torque Control). It enhances rider safety by managing rear-wheel traction, preventing slip on challenging surfaces. With adjustable settings, HSTC ensures optimal performance and stability, delivering a confident and controlled ride in all conditions.

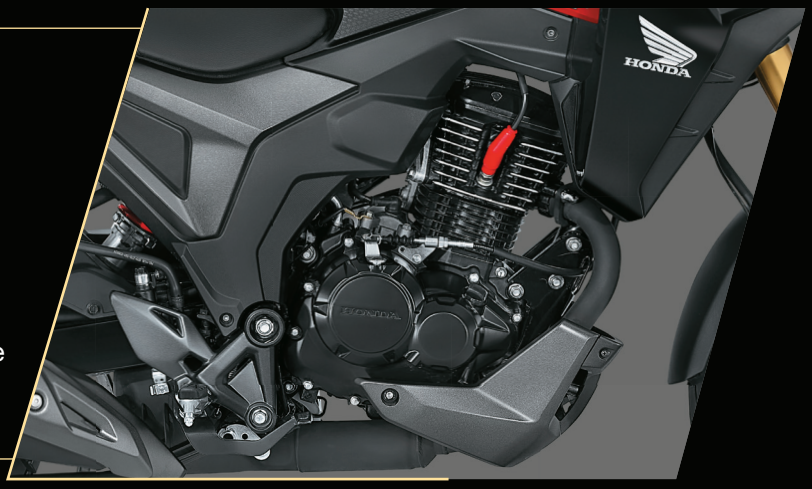

Distinct Design

The new NX200 is a crossover of a street bike and an adventurer. A distinct, striking look that ignites the rider's desire to conquer the urban landscape and beyond.

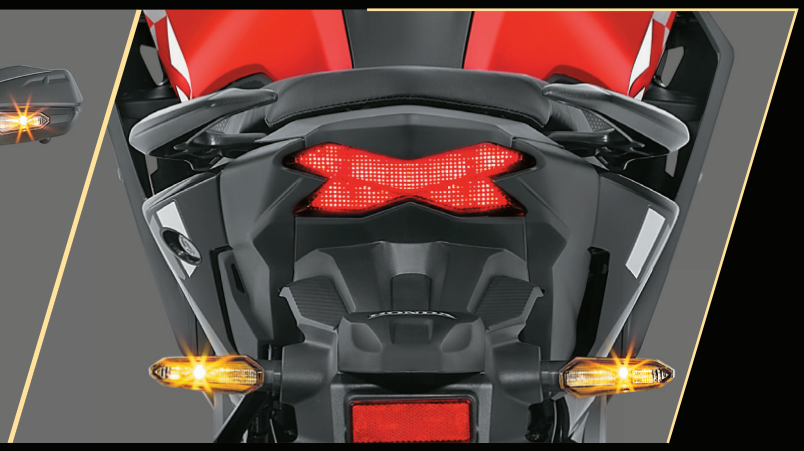

All LED Lighting

Ensures excellent visibility on the roads and it complements the urban explorer look such that all eyes are on you.

Diamond Type Steel Frame

The seeker of thrill needs a befitting skeleton and the Diamond Type Steel Frame of the NX200 provides just that.

Long Comfortable Split Seats

The NX200 has long split seats which enables an upright riding position. This ensures minimal riding fatigue even with long rides.

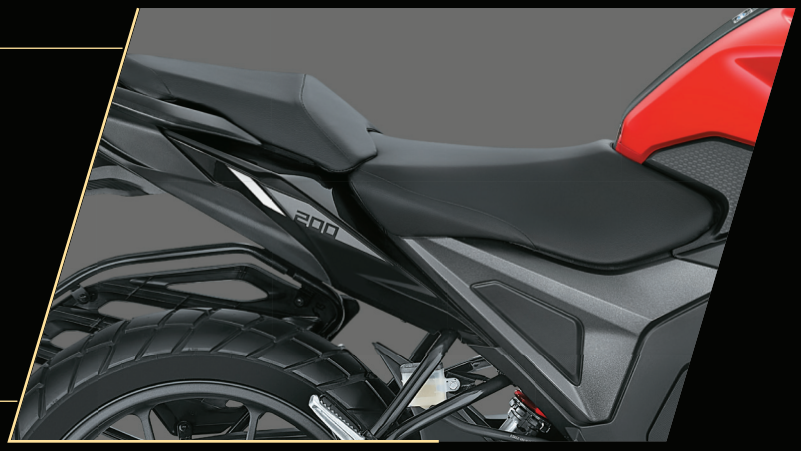

Alloy Wheels

Ride past rough roads and tough terrain with ease and in style with the lightweight and strong alloy wheels of the NX200.

Under Cowl

The Under Cowl accentuates the look of the NX200 and also lends to the aerodynamics of the bike.

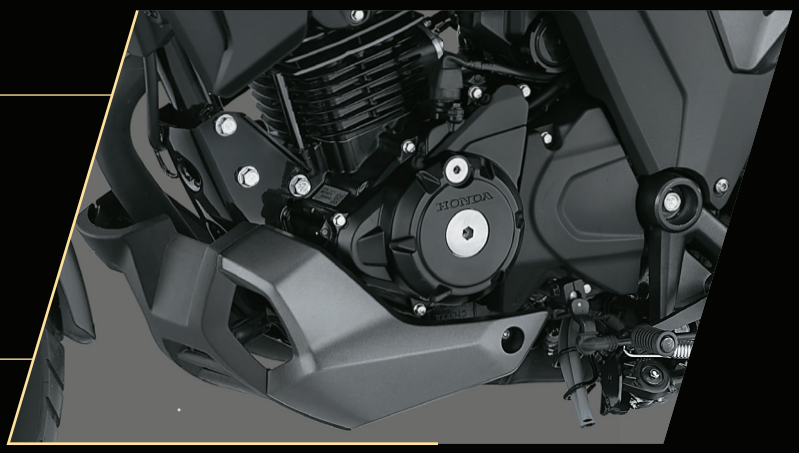

Tall Wind Visor

The Tall Wind Visor ensures optimal aerodynamics and adds to the urban-explorer design.

Upswept Exhaust

The exhaust of NX200 is designed to add to the lean meanmachine look.

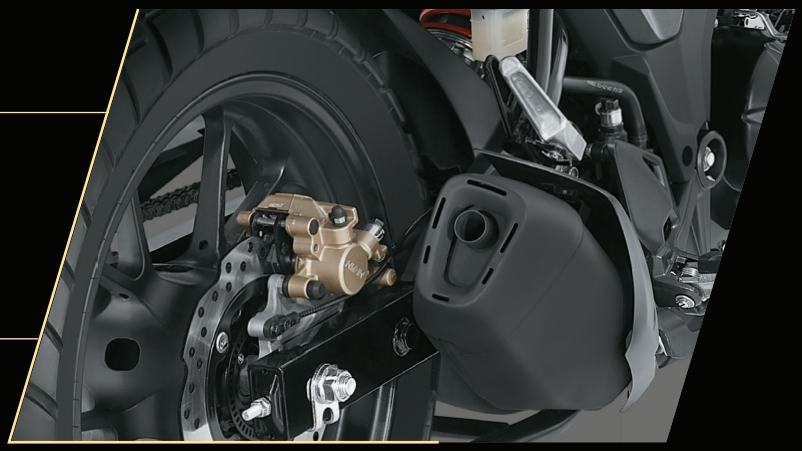

Dynamic Performance

The new NX200 boasts of a highly efficient Honda engine that achieves strong acceleration and quick response in all the speed ranges through the optimization of intake and exhaust components. It has powerful torque characteristics in a practical range & delivers sporty power in high rpm range.

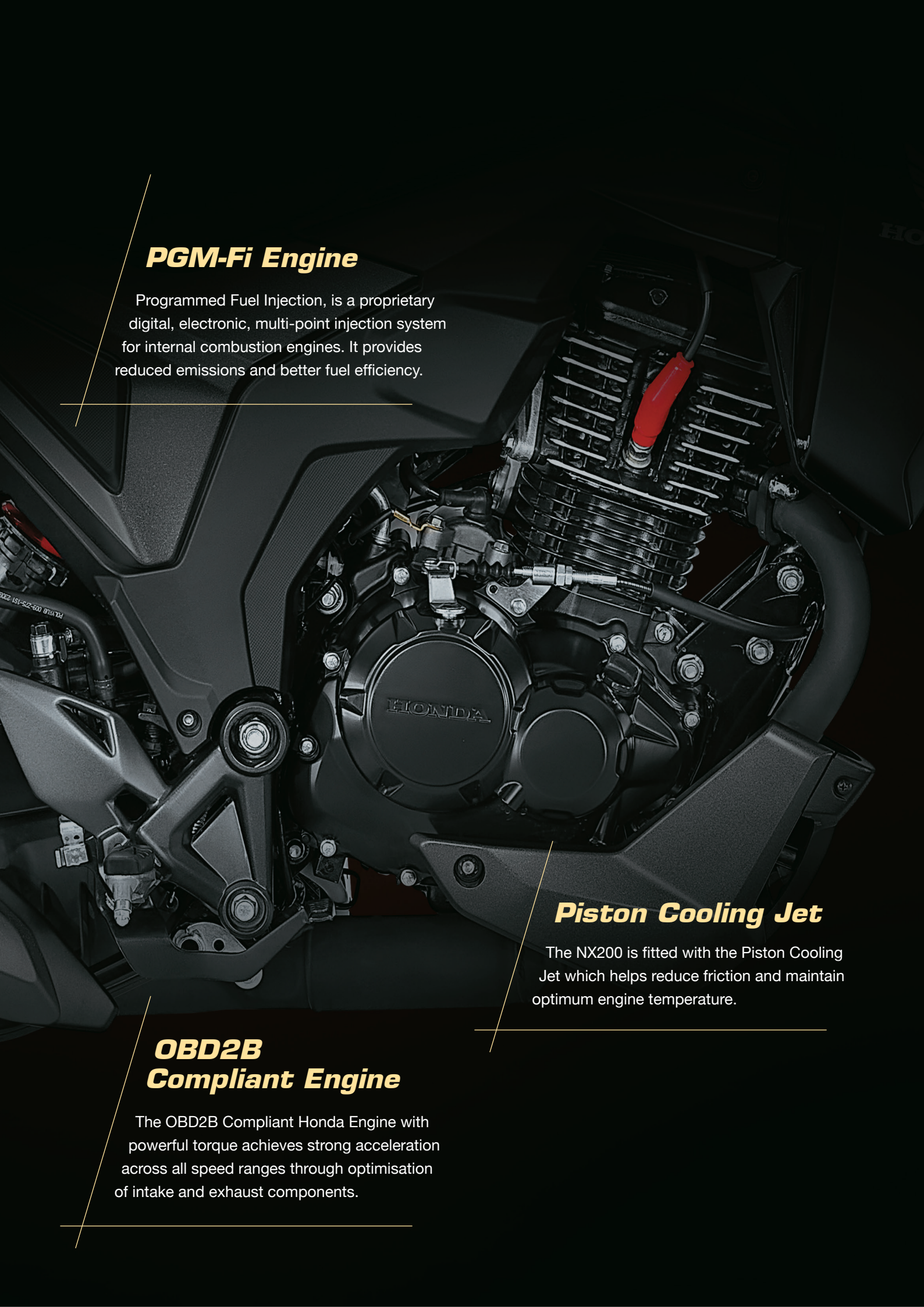

PGM-Fi Engine

Programmed Fuel Injection, is a proprietary digital, electronic, multi-point injection system for internal combustion engines. It provides reduced emissions and better fuel efficiency.

Piston Cooling Jet

The NX200 is fitted with the Piston Cooling Jet which helps reduce friction and maintain optimum engine temperature.

OBD2B Compliant Engine

The OBD2B Compliant Honda Engine with powerful torque achieves strong acceleration across all speed ranges through optimisation of intake and exhaust components.

Ultimate Comfort. Unmatched Convenience.

The new Honda NX200 is built for effortless rides, featuring upright ergonomics that keep you comfortable and fatigue-free on long journeys. Moreover, its well-cushioned seat and raised handlebars ensure a smooth, steady ride, so you can explore without any ifs and buts.

USB C Charging

Stay powered up in every journey! NX200 is equipped with a convenient USB C charging port which can be used to charged your devices on the go.

Hazard Switch

The NX200 is equipped with a Hazard Switch which you can activate if you need to make a stop or slow down.

Honda

EXTENDED WARRANTY

10 YEAR* COVERAGE

3+7 Years Warranty Package

*Complete peace of mind with 10 years warranty package, comprising 3 years standard and 7 years optional service warranty.

Colours

Radiant Red Metallic

Athletic Blue Metallic

Pearl Igneous Black

Specifications

Body Dimensions

Parameters	NX200
Length (mm)	2035mm
Width (mm)	843mm
Height (mm)	1248mm
Wheelbase (mm)	1355mm
Ground clearance (mm)	167mm
Kerb weight (kg)	148kg
Seat height (mm)	810mm
Seat Length (mm)	613mm
Fuel tank capacity (L)	12L

Engine

Parameters	NX200
Type	4 Stroke, SI Engine
Displacement	184.4cc
Max net power	12.5 kW @ 8500 rpm
Max net torque	15.7 Nm @ 6000 rpm
Fuel system	PGM-FI
Bore x stroke(mm)	61.000 X 63.096
Compression ratio	9.5 : 1
Starting method	Self

Transmission

Parameters	NX200
Clutch type	Multiplate Wet Clutch
No. of gears	5

Tyres & Brakes

Parameters	NX200
Braking system	2 Channel ABS
Tyre size & type (front)	110/70-17 M/C 54S
Tyre size & type (Rear)	140/70-17 M/C 66S
Brake type & size (front)	Disc 276mm
Brake type & size (rear)	Disc 220mm

Frame & Suspension

Parameters	NX200
Frame type	Diamond Type
Front suspension	Upside Down Front Fork(USD)
Rear suspension	Monoshock

Electricals

Parameters	NX200
Battery	12V, 5.0Ah
Head lamp	LED
Tail Lamp	LED
Winkers	LED

Shree Shanti Honda
Fast access Building, Burdwan Road Siliguri
Siliguri
Tel: 9144411171
Mob: 9144411172

Honda Motorcycle and Scooter India Pvt. Ltd.,
Registered Office: Plot No. 1, Sector - 03, IMT Manesar, Distt. Gurugram (Haryana) - 122052, India
Customer Care: customercare@honda.hmsi.in **Website:** www.honda2wheelersindia.com

Follow us at :
honda2wheelers.in honda2wheelerin honda2wheelersin honda2wheelerin